DSCP078 Series Spacer

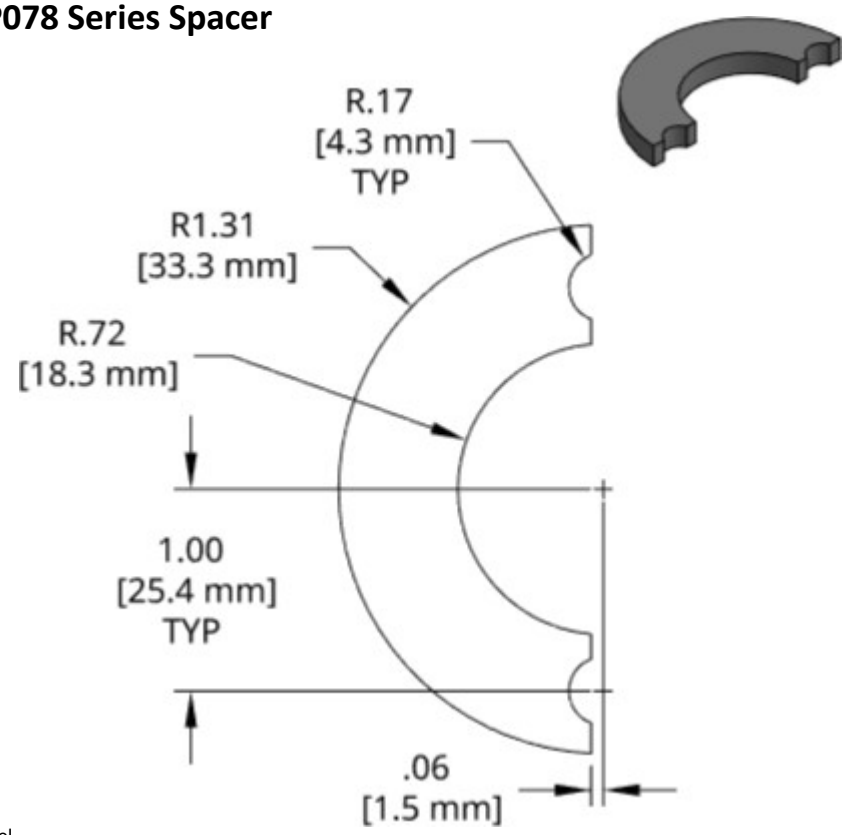

Individual Spacer	Thickness
DSCP078-E250	.25inch

Set consists of two pieces.

1018 Steel
Other thicknesses available by request.

DSCP079 Series Spacer

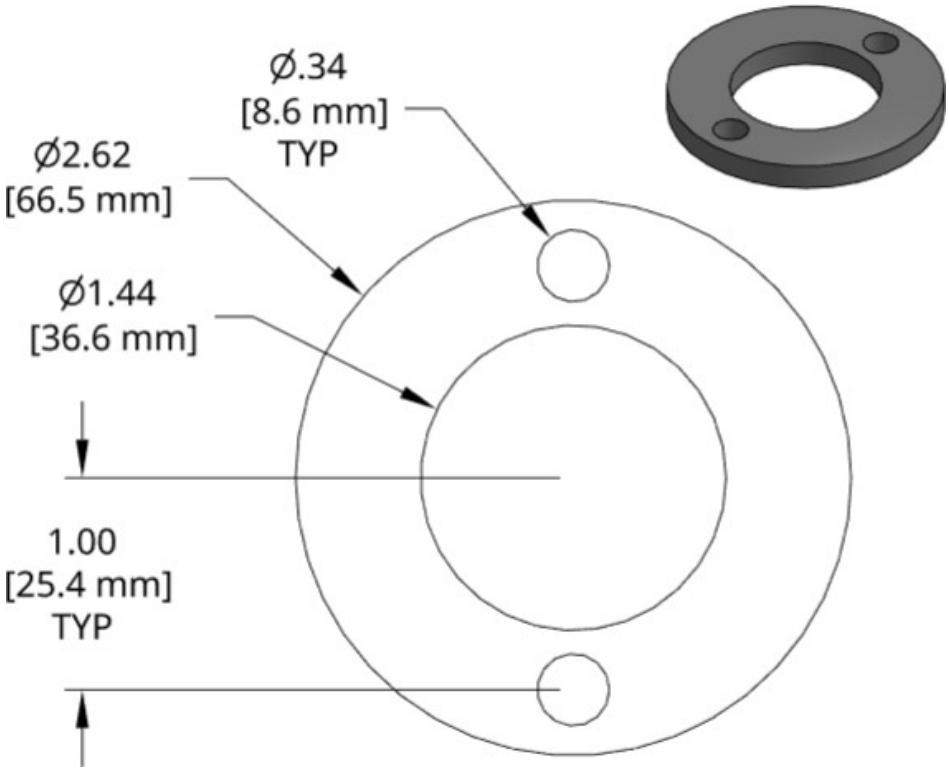

Individual Spacer	Thickness
DSCP079-E250	.25inch

1018 Steel
Other thicknesses available by request.